NOTE:
OVERALL SHIPPING DIMENSION: 29'-3" L X 8'-0" W X 9'-2" H

ITEM	SIZE	SUGGESTED FUNCTION
1	4"	SPARE
2	6"	FILL
3	1/2"	DRAIN FOR SPILLBOX
4	7 GAL.	SPILLBOX, DWG."SBB002"
5	3"	PRIMARY TANK WORKING VENT
6	18"	ABOVE LIQUID MANHOLE, DWG."MHB005"
7	2"	MECHANICAL GAUGE/SPARE
8	8"	PRIMARY TANK EMERGENCY VENT
9	4"	SPARE
10	2"	RETURN
11	2"	SUPPLY
12	LARGE	LIFTING LUG
13	8"	SECONDARY CONTAINMENT EMERGENCY VENT
14	2"	SECONDARY MONITOR PORT
15	2"	SECONDARY WORKING VENT

TANK SPECIFICATIONS

VENTING CAPACITY: PRIMARY TANK - 462,000 CUBIC FEET PER HOUR
SECONDARY TANK - 493,000 CUBIC FEET PER HOUR
MATERIAL: PRIMARY TANK - 1/4" THICK
SECONDARY TANK - 3/16" THICK

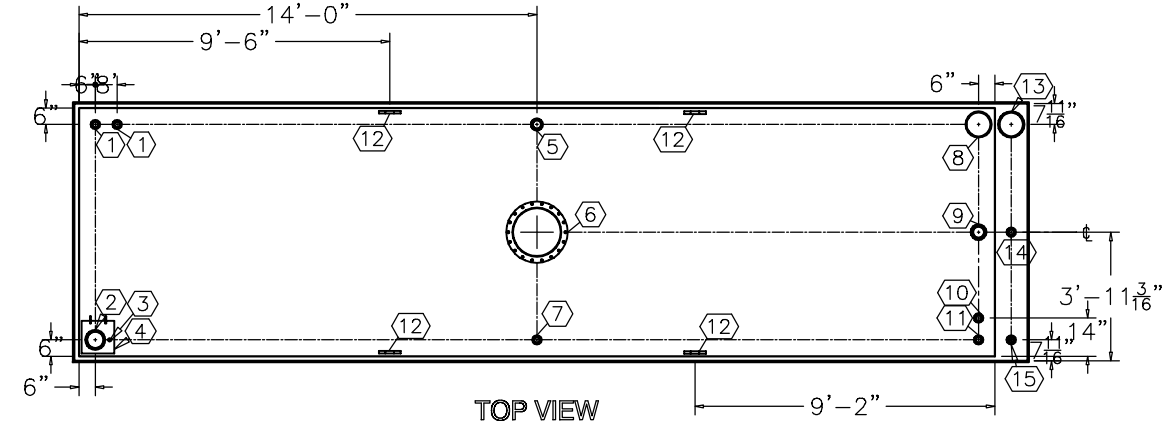

TOP VIEW

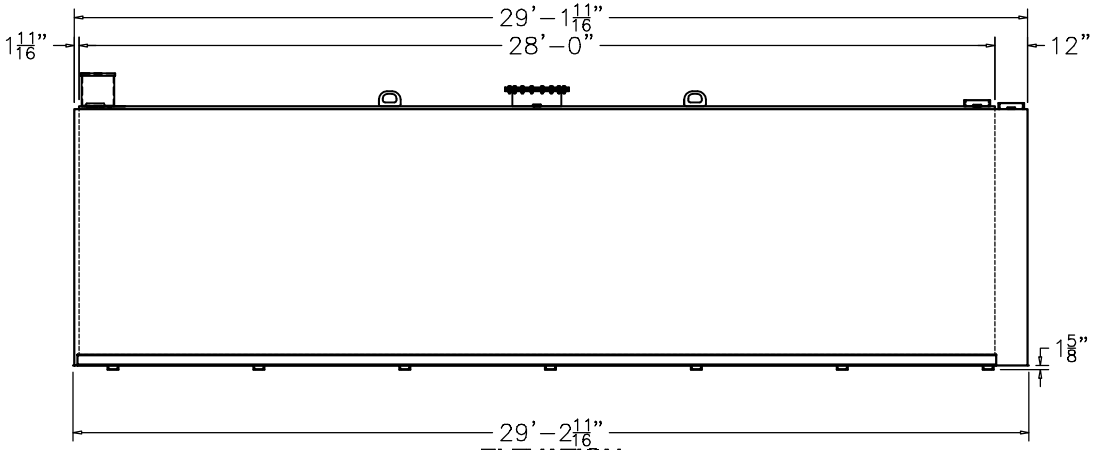

ELEVATION

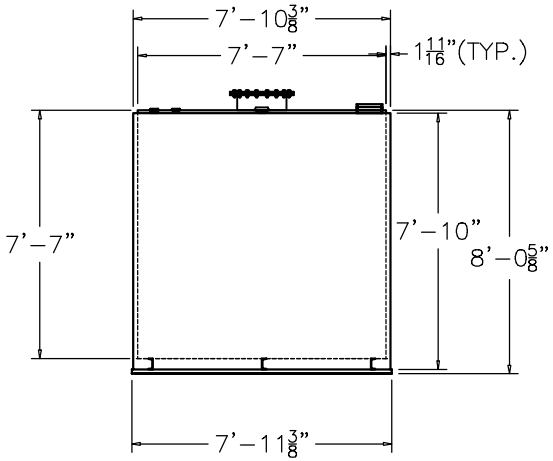

END VIEW

PRODUCT CODE	GALLONS	DESCRIPTION	OVERALL SIZE	SHIP WT.
GCAA112MDS001	12,000	UL-142 DOUBLE WALL GEN CUBE TANK W/SPILLBOX	29'-3" L X 8'-0" W 8'-1" H	18,550 LBS.

THIS DRAWING AND DESIGN SHOWN HEREIN IS THE PROPERTY OF CONTAINMENT SOLUTIONS. USE OR COPIES THEREOF CANNOT BE MADE WITHOUT WRITTEN CONSENT.

CUSTOMER NAME

APPROVED BY: _____ DATE: _____

CONTAINMENT SOLUTIONS®

DRAWN BY: D.ROVANG	DATE DRAWN: 01-01-14
DWG NUMBER: 5104017	SCALE: 1:72
REV: / REV BY: / DATE:	SHEET: 1 OF 1